EPD®

THE INTERNATIONAL EPD® SYSTEM

www.environdec.com

SIRAP

MORE THAN PACKAGING

D.edge®

PET PACKAGING LINE FOR FRESH FOOD APPLICATIONS

ITEMS: SD0250, SD0375, SD0500, SD0750, SD1000

ENVIRONMENTAL PRODUCT DECLARATION

In accordance with ISO 14025

CPC CODE 36490 Fresh Food Plastic packaging	**PUBBLICATION DATE** 2020/09/25	**PROGRAMME OPERATOR** EPD INTERNATIONAL AB
DATE OF REVISION 2020/09/09	**VALID UNTIL** 2025/09/08	**REGISTRATION NUMBER** S-P-02114

An EPD should provide current information, and may be updated if conditions change. The statet validity is therefore subject to the continued registration and pubblication at www.environdec.com.

SIRAP GROUP

More than packaging

The Group

Sirap Group is one of the most qualified fresh food packaging producers in Europe. It is 100% controlled by *Italmobiliare*, an Italian holding listed on the Milan stock exchange.

Sirap (Società Italiana Ricerca Applicazioni Plastiche) was founded in 1960. The Group headquarter is located in *Verolanuova*, Italy. More than 1500 employees work in the Company's factories and offices, located in Italy, France, Spain, UK, Germany, Poland, Austria and Eastern Europe.

Sirap is committed to **pursuing innovation and sustainability** for the improvement of food distribution and preservation.

The offering

The company develops innovative solutions for all fresh food packaging needs: rigid containers in **XPS** (polystyrene foam), **OPS** (bi-oriented polystyrene), **PET** (polyethylene terephtalate), **PP** (polypropylene) and in compostable materials (**PLA** and **Mater-Bi®**) for all food applications.

The Group provides a wide range of trading products for the fresh food industry and for retail applications (films, containers, machineries, accessories), offering **complete packaging systems.**

Sirap Group

OUR HISTORY

60 years of packaging experience

1960
SIRAP is founded in Verolanuova

1990
SIRAP becomes part of *Italmobiliare Group*

1993
LAUNCH of the new XPS absorbent tray *Activopack*

1994
ACQUISITION and creation of *Sirap France*

2003
LAUNCH of the new XPS barrier absorbent tray *BAT*

2003
ACQUISITION of *Petruzalek Group*

2005
ACQUISITION of the Hungarian XPS production plan in *Hatvan*

2006
ACQUISITION of *Amprica* in Italy and of *Inline* in Poland

2008
CONSTRUCTION of the new *Inline Poland* Plant in Murowana Goslina

2011
ACTIVATION of the *Environmental Policy* for a sustainable development

2015
LAUNCH of the new rigid *tamper evident packaging Safe-T-Fresh®*

2015
ACQUISITION of *Vitembal Société Industrielle*

2016
ACQUISITION of *Rosa Plast Due S.r.l.*

2017
CONSTRUCTION and extension of the *Inline Poland* plant in Murowana Goslina

2018
ACQUISITION of *Kama Europe Ltd* in UK and of *Reynolds Food Packaging Spain* in Spain

2018
ACQUISITION of *Vitembal Tarascon* in France and of *Vitembal GmbH* in Germany

2018
LAUNCH of the first compostable packaging line *Earth's*

2019
CREATION of the new strategic plan for *sustainability*

2019
LAUNCH of the new eco-designed *D.edge®* packaging line

2020
LAUNCH of the new *tamper evident Safe-T-Fresh®* packaging in Polypropylene

EPD & CERTIFICATIONS

Our certified system

EPD®

THE INTERNATIONAL EPD® SYSTEM

The **Environmental Product Declaration (EPD)** is an independently verified and registered document based on verified **life-cycle assessment** (LCA) data.
Sirap Group is using EPDs in accordance with the **International EPD® System**, to communicate the environmental performance of its products in a **transparent way**.
This EPD follows the Product Category Rules (PCR) for *industrial packaging* UN CPC 2019:13 as well as the principles and procedures of ISO 14025 and ISO 14040/14044:2016.
The EPD has been externally validated by an independent verifier approved by the technical committee of EPD International.

Certification process

Sirap Group requires the external recognition of the business processes in terms of **environmental safeguard, food quality and safety**. The Group is aiming at leading all productive sites towards a *certified system* by improving the business processes and integrating them with action uniformity.

Each phase of the production process is subject to more than **1100 daily controls** in all Group plants, a total of over **200 thousand quality checks a day**, guaranteeing high quality standards for customers.

GROUP CERTIFICATIONS

ISO 9001:2015
Verolanuova - Castelbelforte - S.Vito al Tagliamento - Castiglion Fiorentino - Noves - Remoulins - Murowana Goslina plants and Sirap GMBH are ISO 9001:2015 certified.

ISO 14001
Verolanuova - Castelbelforte - S.Vito al Tagliamento - Castiglion Fiorentino - Noves - Remoulins - Murowana Goslina - Hatvan plants are ISO 14001 certified.

OHSAS 18001
Verolanuova - Castelbelforte - S.Vito al Tagliamento - Castiglion Fiorentino - Noves - Remoulins - Murowana Goslina - Hatvan plants are OHSAS 18001 certified.

BRC ISSUE 5
Verolanuova - Castelbelforte - S.Vito al Tagliamento - Remoulins - Murowana Goslina plants and Sirap UK are BRC issue 5 certified.

Group Certifications

SUSTAINABILITY

Our global committment

The main functions of packaging are **to protect and to preserve food,** keeping it fresh and safe as long as possible and **preventing food waste**. **Sirap believes in sustainability** and its positive impact on the environment, the society and the economy. It permeates throughout the many aspects of the company, from the production processes to the delivery of the final product, crossing all the functions involved.

Product **eco-design** and its **recyclability** are key elements of our sustainability programme. Sirap activated fruitful collaborations with the recycling industry to improve the quality and enlarge the availability of post-consumer plastics.

In 2011, the company established the **"Energy Saving Policy"** across the Group. The Policy, still active, is aimed at improving the energy efficiency, monitoring the energy consumption of all the company's assets and guiding the personnel via best practices that can **cut down any waste of resources.**

The main actions are:

- Process optimization;
- Plants regular maintanance;
- Efficient lighting management;
- Efficient air conditioning system;
- Efficient air pressuring system;
- Staff training.

Every year, the company sets its sustainability targets higher. To achieve them, **Sirap involves experienced and reliable partners**, Universities, Research Centers and teams of professionals.

4 Axis of development

PROCESSES

Major investments are made every year with the aim of optimizing energy and water consumption and, consequently, reducing CO2 emissions.

MATERIALS

In addition to containing high percentages of recycled raw material, Sirap materials are designed to ensure maximum performance and food safety with the lowest possible amount of plastic.

PRODUCTS

Each new packaging is designed using the eco-design process, follows the guidelines of the European Plastic Strategy and get assessed by LCA test (Life Cycle Assessment).

SOCIAL RESPONSIBLITY

The growth of people, their health and safety and the commitment to gender equality at all levels are fundamental values in Sirap.

Sirap, through the Pro Food Group (Group of Fresh Food Packaging Producers), of which it is founder and member, is actively involved in setting up a more efficient supply chain for *packaging recovery and recycling*, opening a dialogue with industry and institutions to clarify the real benefits of plastic packaging and the protection of thousands of jobs.

UNIONPLAST

This EPD is part of the sustainability programme of Pro Food. Discover more on: www.profooditalia.it

The 4 sustainability pillars of our strategy

Our 2020-2023 sustainability strategy is based on four pillars, declined in objectives achievable through a detailed plan of coordinated actions at Group level.

Check the Sustainability Report for further details on www.sirapgroup.com/sustainability

1

We want to make all our solutions circular and promote circularity throughout the supply chain

Innovation is the cornerstone of our mission: we are committed to implementing our Group-wide guidelines for Ecodesign, developing new products that are increasingly circular and sustainable.
In order for the circularity of products to be effective, we support networking with regulatory authorities, which have a key role in making the plastic supply chain sustainable.

2

We want to act at the origin of the marine litter

The problem of plastic in the seas concerns us directly: for this reason we actively participate in waste collection events that we organize for the beaches of the Mediterranean, the banks of rivers and the environment in general. We want to avoid the spread of plastic waste in the seas, in particular in the countries most at risk, and to facilitate the collection of waste currently present, by activating partnerships with rPET suppliers also coming from Asian, African and Middle East countries.

3

We want to reduce our environmental footprint

To become aware of the results obtained in the environmental efficiency processes of products, and to be able to improve them even more, we have commissioned and carry out Life Cycle Assessment (LCA) studies to measure the impact of our products throughout the life cycle.
We are committed to monitor and improve the performance of the key environmental performance indicators.

4

We want to generate a positive social impact

We want to spread the latest information and studies on food packaging to the public. Our goal is transparency: there is no place for greenwashing - generic pro-environment claims, not supported by data - but only for information based on scientific and objective data, such as those contained in the environmental product declaration (EPD). To feel involved and take actions, People must be informed. With the recently activated internal newsletter, we want to engage our collaborators and keep them updated on these issues.

ECO-DESIGN

Our sustainable design approach

Eco-design is an approach to designing products with special consideration for the **environmental impacts of the product during its whole lifecycle.** It is applied since the very first stages of Sirap product development and is aimed at improving the environmental performances of our packaging by **analysing the single impacts indicators with an LCA** (Life Cycle Assessment).
Thanks to these evaluations, Sirap design department can optimize its output towards **more sustainable packaging solutions.**

1st

UNDERSTAND CLIENT'S NEED

PROJECTS DOS AND DON'TS

Understand together with the client what are the essential aspects of the pack, what can be improved by the Ecodesign process and what characteristics are fixed.

2nd

ECODESIGN

MAKING IT REAL

After receiving the brief our designers and technicians are able to make the best packaging for that client's need, with the lowest possible environmental footprint.
Through our specific guidelines based on the End of Life and Life Cycle Assesment we can reduce a product's environmental impact in all its lifecycle, optimizing it in 360°.

3rd

LIFE CYCLE ASSESMENT (LCA)

SCIENTIFICAL METHODOLOGY

The LCA is a method of calculating the environmental impacts associated with the production of a good or service during its entire life cycle (production of the raw material, transport, processing, distribution, use, disposal). This measurements and studies support our ecodesign policies. It allows us also to compare different materials and products, which serves to analyse our goods and work on the continuous improvement of their environmental footprint.

4th

END OF LIFE OPTIMIZATION

POST-CONSUMPTION

After use, our products enter the Waste Management in different countries. To design products suitable for the best End of Life - EOL - Recycling, we studied and still collaborate with many stakeholders of this value chain, like sorters, recyclers technologies including European and local associations.

The eco-design process

D.EDGE®

Our eco-designed packaging

The D.edge® concept was born with the specific intent of **reducing the amount of raw material contained in Sirap's packaging while maintaining or improving its performances**, avoiding the loss of design cleanliness and enhancing transparency.

To achieve this target, the design team started the iterative process of prototyping various packaging solutions, following the principles of eco-design. After an intense testing phase on different geometric variants, that involved *FEM analysis* on virtual models and mechanical analysis on physical prototypes, Sirap came up with the optimal design of the edges: the patent-pending D.edge® (*Diamond Edge*) solution.

This particular edge gives **extra strength and rigidity** to the overall structure of the container, allowing it to have a **higher compression strength** (+20%) and **lower compression deformation** (-20%) in comparison with the same design with standard edges.

These improved performances let Sirap produce the packaging on a **thinner foil of monomaterial PET containing 35-55% of post-consumer recycled PET**. A lower thickness leads to a lower weight, therefore **the total environmental impact of the container is lower.**

Product optimization has affected the production and logistics aspects:

- the sizing of the product has been designed **to make transport more efficient**, optimizing the number of pieces per box and pallet;
- the industrial moulds have been designed **to minimize geometric waste** during every production cycle. **Every production residual is reintroduced in the extrusion stream** to avoid unnecessary waste.

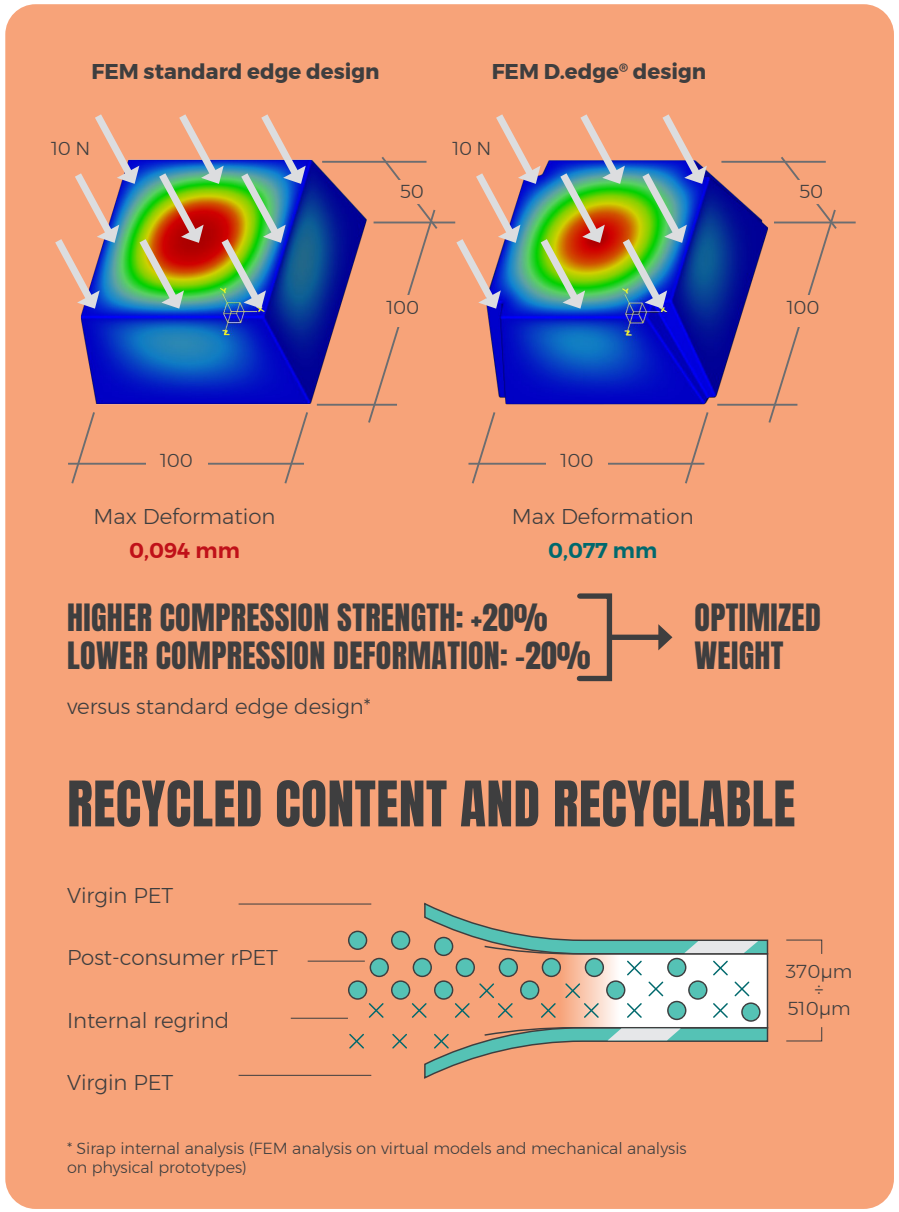

Mechanical performances and foil structure

SD0250 + SD0375

PRODUCT INFORMATIONS

Upstream

The upstream processes include the extraction, the production and the supply of raw materials used in the packaging production. Secondary data from Ecoinvent database 3.4 has been used.

Core

The core processes to produce D.edge® are divided into 4 main stages:
Acceptance and storage of raw materials and auxiliary products: reception and unloading of raw materials (virgin PET pellets, post-consumer PET flakes, secondary packaging, coatings, etc.).

Extrusion process: loading and dosing of raw materials, extrusion, calendering, trimming, coating deposition (silicone, antifog), wrapping of the PET semi-finished plate.

Roll transportation: truck transport of the semi-finished product (roll).

Thermoforming process: unrolling, pre-heating in the oven, forming, cutting and stacking of the finished product (D.edge®), packing in secondary and tertiary packaging.

Closed-loop recycling process: loading, grinding and bagging (big-bags) of the geometric waste of the thermoforming process, to be reused in the extrusion process of the same product system, or equivalent product systems.

EPD TYPE: CRADLE TO GATE

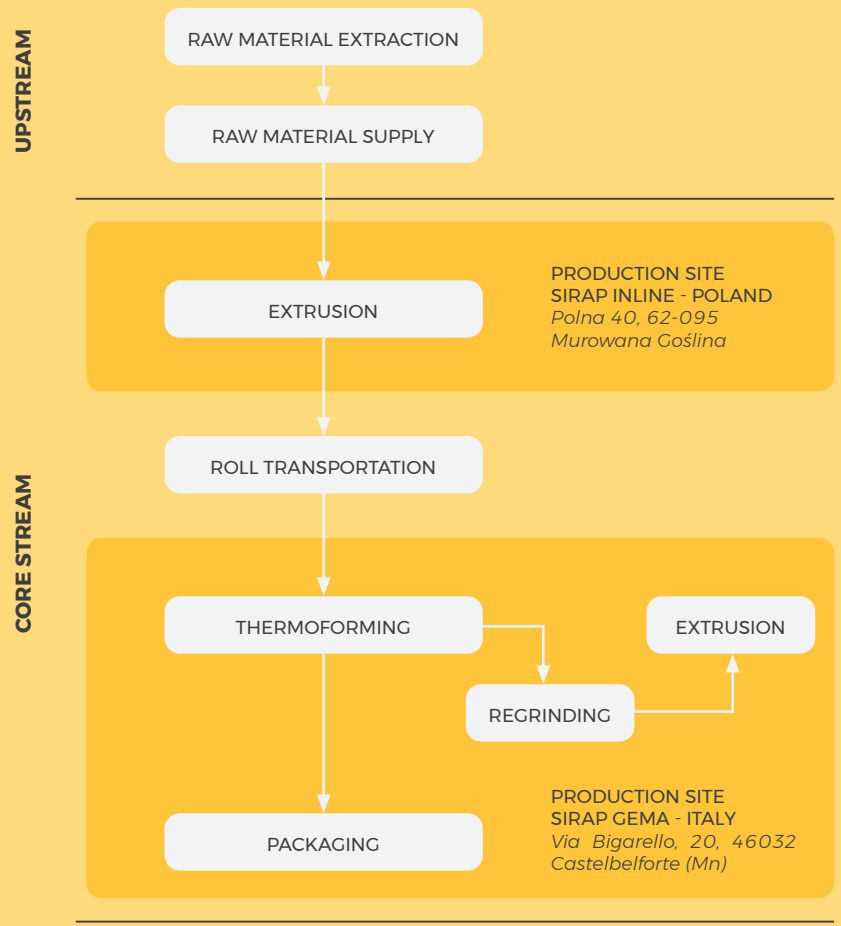

Product information

Packaging: preparation of supply mixes, pallet loading and dispatch.
Depending on the production and supply plans, the intermediate storage phases of the semi-finished or finished product can be envisaged.

Downstream

The distribution of the product, the areas of filling and use (stages B1-B5) have been excluded from the study as they are very different depending on the category of application and geographical destination, and therefore difficult to model on a theoretical basis.
Life cycle module "Final disposal" (C3) are excluded in the main model, but were included in the in-depth study of the End of life for the D-Edge® SD0500, the results of which are reported in the following "Additional Environmental Information" chapter of this EPD.

The electricity energy mixes for the corestream processes are modelled according to the european residual mixes, as requested by the PCR, section 4.10 (other calculation rules and scenario).

Cut off criteria

This EPD follows the cut-off rules stated in the PCR, section 4.5.
Data for elementary flows to and from the product system contributing to a minimum of 99% of the declared environmental impacts have been included. A proxy data has been used to model the production of the refrigerant gases of the corestream processes.

Production site

The production of D.edge® packaging is divided in two production sites: the extrusion of the rolls is located in Murowana Goślina (Poznan, Poland), while the therforming process of the trays is located in Castelbelforte (MN), Italy. Both the plant have obtained the following certifications: BRC Issue 5, ISO 9001:2015, ISO 14001, OHSAS 18001. The energy consumption is punctually monitored and optimized. The plant is equipped with closed-circuit water distribution systems, which allow it to save extensive amounts of water.

LCA calculation

The *SimaPro* v9.0.0.35 software and the *Ecoinvent* v3.4 database were used to analyze the environmental impact. The data used to perform the analysis were collected during the first half of the year 2020 and refer to the year 2019. Data having quality characteristics corresponding to the following requirements were used: the time frame of interest is 10 years maximum; average data from European plants for European products and average data from plants in the rest of the world for non-European products were used as geographical coverage.
To increase precision, a sensitivity analysis was developed for flows subject to variability. For completeness, all flows have been measured or estimated except as allowed by the cut-off.

Geographical Scope

The geographical scope of this EPD is the geographical location(s) of use and end-of-life of the products and can be referred to the European market.

The European average data from the Ecoinvent and PlasticsEurope databases have been used as secondary data.

Product information

Data quality

Data consistency is ensured by comparison with sector data (Plastics Europe Ecoprofiles) and with the collection of primary data from suppliers. Reproducibility and source of data are guranteed by the PCR of reference. A proxy data has been used to model the production of the refrigerant gases of the corestream processes.

Declared unit

The declared unit is a packaging unit with a hinged bottom and lid able to contain the stated volume (250 ml; 375 ml; 500 ml; 750 ml; 1000 ml) of salad, fruit and/or vegetables, cold ready meals, candies, etc., with the appropriate mechanical properties to protect the content and prevent the leakage of liquids while guaranteeing transparency to ensure the visibility of the food.
The aforementioned unit can be filled either in an automated system of the food industry or manually.
The laboratory tests carried out on the trays respect internal methods, but do not refer to ISO standards (eg. ISO12048 for compression and stacking tests).

UNIT	PET POST-CONSUMER RECYCLED CONTENT	EXT. SIZE [mm]	INT. VOLUME [ml]	WEIGHT [g]	TOP LOAD [N]
SD0250	35-55%	111x106x66	250	11,4	99
SD0375		123x118x80	375	15,2	118
SD0500		133x128x86	500	18,8	71
SD0750		147x142x100	750	28,9	143
SD1000		160x155x112	1000	30,8	104

CONTENT DECLARATION

Material composition

- Virgin PET (15-25%)
- Post-consumer recycled PET (35-55%)
- Internal regrind (30-40%)
- Coating (anti-fog, silicone) (<0,1%)

All the materials in direct contact with food comply with existing legislation (EU 10/2011)

Recycled content

The D.edge® packaging contains 55% of post-consumer recycled PET coming from PET bottle flakes, calculated in accordance with ISO 14021:2016. The fraction of post-consumer recycled material, together with the internal recycled fraction, coming from the geometrical waste of the thermoforming phase, are inside a co-extruded A-B-A structure, protected by a layer of virgin raw material necessary to guarantee the food contact compliance, according to EU 10/2011 regulation.

Secondary packaging

The PET containers are nested and placed inside a PE sack that guarantees the integrity of the products against humidity and external pollutant. Then, the sack containing D.edge® packaging is placed inside a cardboard box, which is identified with a paper-based label that describes the content of the carton box.
The size of the box is optimized to fit on a Euro-pallet (1200x800 mm) efficiently.

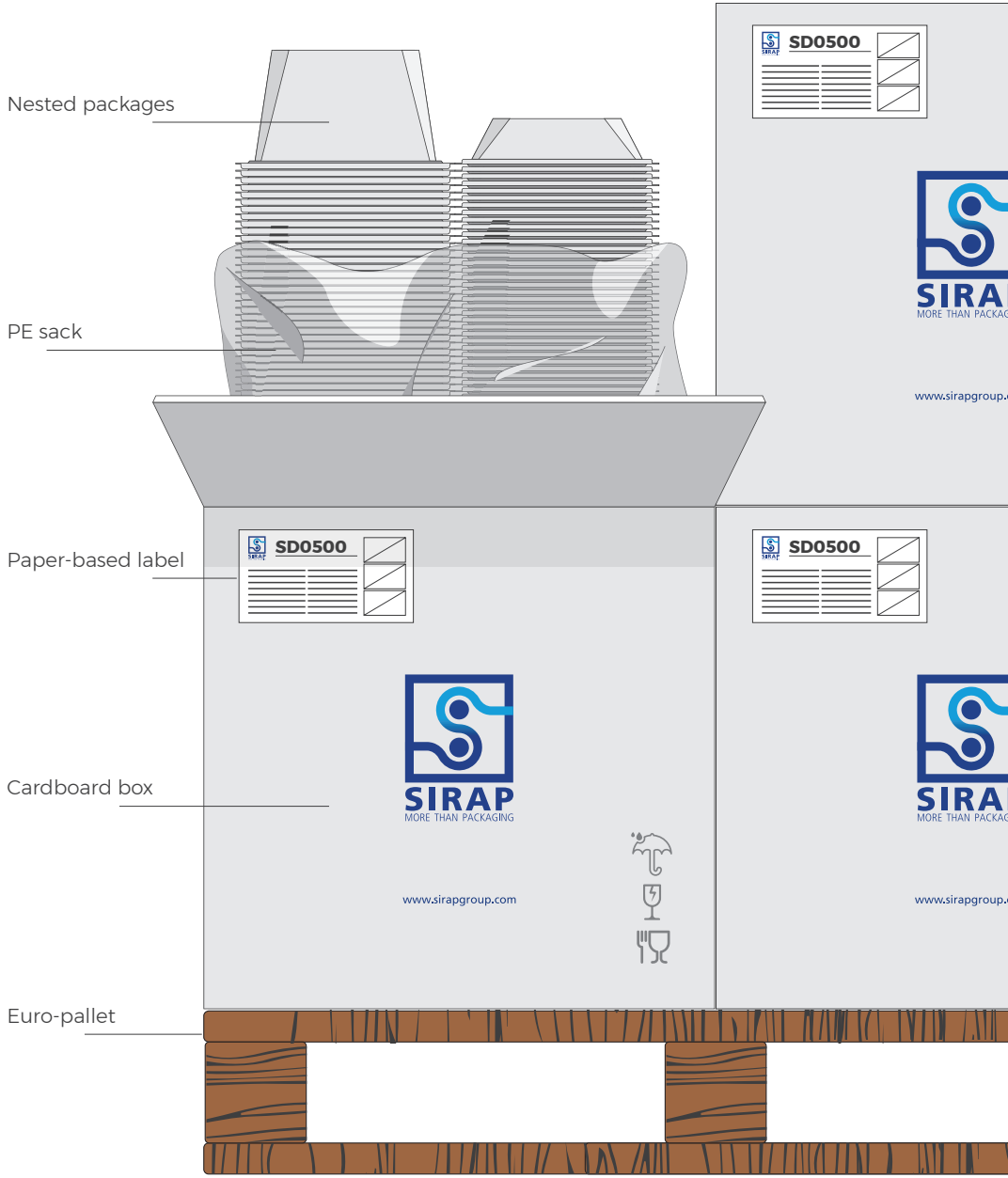

SD0250

SIZE (mm)	WEIGHT (g)
111x106x66	11,4

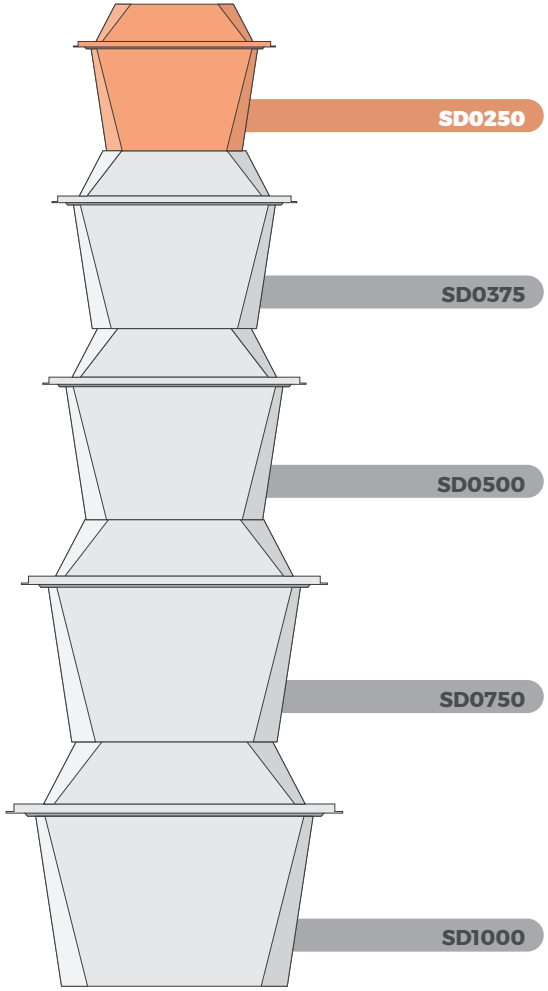

Indicators describing potential environmental impacts

PARAMETER		UNIT	UPSTREAM	CORE	TOTAL
"Global Warming Potential (GWP)"	Fossil	kg CO_2 eq	2,06E-02	2,05E-02	4,10E-02
	Biogenic	kg CO_2 eq	1,52E-03	1,51E-05	1,54E-03
	Land use and land transformation	kg CO_2 eq	1,81E-05	6,77E-06	2,49E-05
	TOTAL	kg CO_2 eq	2,21E-02	2,05E-02	4,26E-02
Acidification potential (AP)		kg SO_2 eq	8,21E-05	1,02E-04	1,84E-04
Eutrophication potential (EP)		kg PO_4^{---} eq	3,54E-05	2,52E-05	6,06E-05
Photochemical oxidant formation		kg NMVOC	6,29E-05	6,86E-05	1,32E-04
Abiotic depletion - Elements		kg Sb eq	7,47E-08	2,17E-08	9,64E-08
Abiotic depletion - Fossil Fuels		MJ	3,61E-01	2,63E-01	6,25E-01
Water scarcity potential		m^3	7,38E-03	2,99E-03	1,04E-02

Indicators describing use of primary and secondary resources

PARAMETER		UNIT	UPSTREAM	CORE	TOTAL
"Primary energy resources - Renewable"	Used as energy carrier	MJ	2,06E-02	2,40E-02	4,46E-02
	Used as raw materials	MJ	0	0	0
	Total	MJ	2,06E-02	2,40E-02	4,46E-02
"Primary energy resources - Non-Renewable"	Used as energy carrier	MJ	3,21E-01	3,03E-01	6,23E-01
	Used as raw materials	MJ	1,10E-01	0	1,10E-01
	Total	MJ	4,31E-01	3,03E-01	7,34E-01
Secondary material		kg	0	0	0
Renewable secondary fuels		MJ	0	0	0
Non-renewable seconday fuels		MJ	0	0	0
Net use of fresh water		m^3	2,14E-04	3,67E-04	5,81E-04

Indicators describing waste production

PARAMETER	UNIT	UPSTREAM	CORE	TOTAL
Hazardous waste disposed	kg	2,68E-06	4,02E-07	3,08E-06
Not-Hazardous waste disposed	kg	6,79E-03	7,14E-03	1,39E-02
Radioactive waste disposed	kg	9,04E-07	9,43E-07	1,85E-06

Indicators describing output flows

PARAMETER	UNIT	UPSTREAM	CORE	TOTAL
Components for reuse	kg	0	0	0
Materials for recycling	kg	0	1,70E-03	1,70E-03
Materials for energy recovery	kg	0	7,15E-05	7,15E-05
Exported energy, electricity	MJ	0	0	0
Exported energy, thermal	MJ	0	0	0

SD0375

SIZE (mm)	WEIGHT (g)
123x118x80	15,2

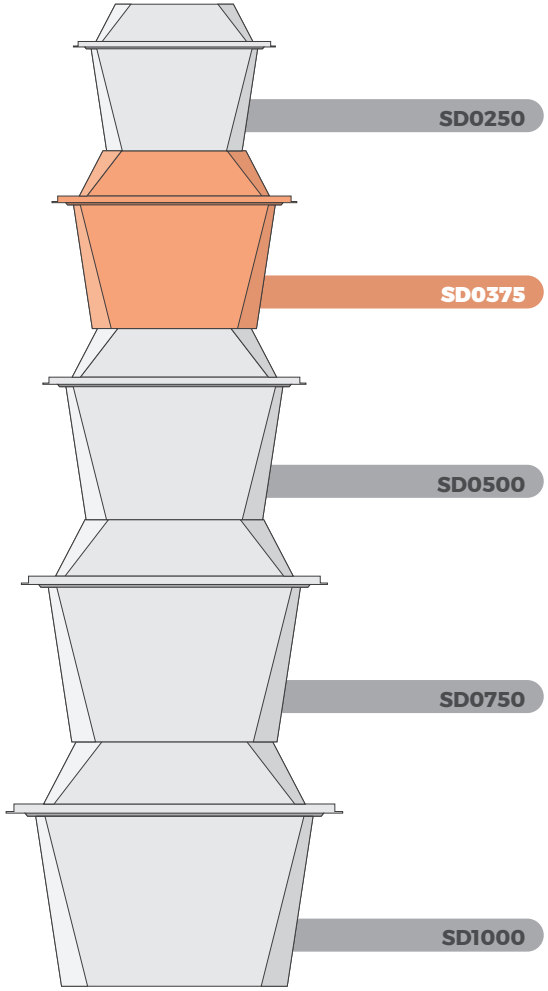

Indicators describing potential environmental impacts

PARAMETER		UNIT	UPSTREAM	CORE	TOTAL
"Global Warming Potential (GWP)"	Fossil	kg CO_2 eq	2,76E-02	2,67E-02	5,43E-02
	Biogenic	kg CO_2 eq	2,06E-03	1,98E-05	2,08E-03
	Land use and land transformation	kg CO_2 eq	2,37E-05	8,98E-06	3,27E-05
	TOTAL	kg CO_2 eq	2,97E-02	2,67E-02	5,64E-02
Acidification potential (AP)		kg SO_2 eq	1,10E-04	1,33E-04	2,44E-04
Eutrophication potential (EP)		kg PO_4^{---} eq	4,76E-05	3,28E-05	8,04E-05
Photochemical oxidant formation		kg NMVOC	8,46E-05	8,99E-05	1,74E-04
Abiotic depletion - Elements		kg Sb eq	1,01E-07	2,84E-08	1,29E-07
Abiotic depletion - Fossil Fuels		MJ	4,86E-01	3,44E-01	8,29E-01
Water scarcity potential		m^3	9,93E-03	3,91E-03	1,38E-02

Indicators describing use of primary and secondary resources

PARAMETER		UNIT	UPSTREAM	CORE	TOTAL
"Primary energy resources - Renewable"	Used as energy carrier	MJ	2,71E-02	3,17E-02	5,88E-02
	Used as raw materials	MJ	0	0	0
	Total	MJ	2,71E-02	3,17E-02	5,88E-02
"Primary energy resources - Non-Renewable"	Used as energy carrier	MJ	4,31E-01	3,95E-01	8,25E-01
	Used as raw materials	MJ	1,49E-01	0	1,49E-01
	Total	MJ	5,80E-01	3,95E-01	9,75E-01
Secondary material		kg	0	0	0
Renewable secondary fuels		MJ	0	0	0
Non-renewable seconday fuels		MJ	0	0	0
Net use of fresh water		m^3	2,88E-04	4,75E-04	7,63E-04

Indicators describing waste production

PARAMETER	UNIT	UPSTREAM	CORE	TOTAL
Hazardous waste disposed	kg	3,61E-06	5,27E-07	4,14E-06
Not-Hazardous waste disposed	kg	9,16E-03	9,42E-03	1,86E-02
Radioactive waste disposed	kg	1,22E-06	1,23E-06	2,45E-06

Indicators describing output flows

PARAMETER	UNIT	UPSTREAM	CORE	TOTAL
Components for reuse	kg	0	0	0
Materials for recycling	kg	0	2,30E-03	2,30E-03
Materials for energy recovery	kg	0	9,71E-05	9,71E-05
Exported energy, electricity	MJ	0	0	0
Exported energy, thermal	MJ	0	0	0

SD0500

SIZE (mm)	WEIGHT (g)
133x128x86	18,8

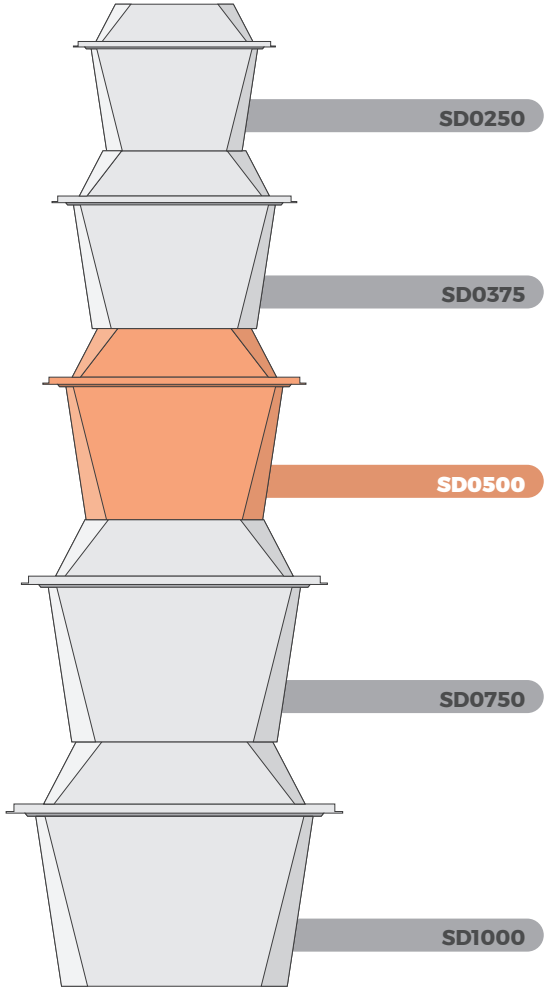

Indicators describing potential environmental impacts

PARAMETER		UNIT	UPSTREAM	CORE	TOTAL
"Global Warming Potential (GWP)"	Fossil	kg CO_2 eq	3,29E-02	3,13E-02	6,42E-02
	Biogenic	kg CO_2 eq	2,44E-03	2,34E-05	2,47E-03
	Land use and land transformation	kg CO_2 eq	2,86E-05	1,06E-05	3,92E-05
	TOTAL	kg CO_2 eq	3,53E-02	3,14E-02	6,67E-02
Acidification potential (AP)		kg SO_2 eq	1,31E-04	1,57E-04	2,88E-04
Eutrophication potential (EP)		kg PO_4^{---} eq	5,67E-05	3,85E-05	9,52E-05
Photochemical oxidant formation		kg NMVOC	1,01E-04	1,06E-04	2,06E-04
Abiotic depletion - Elements		kg Sb eq	1,20E-07	3,34E-08	1,53E-07
Abiotic depletion - Fossil Fuels		MJ	5,78E-01	4,04E-01	9,82E-01
Water scarcity potential		m^3	1,18E-02	4,60E-03	1,64E-02

Indicators describing use of primary and secondary resources

PARAMETER		UNIT	UPSTREAM	CORE	TOTAL
"Primary energy resources - Renewable"	Used as energy carrier	MJ	3,26E-02	3,74E-02	7,00E-02
	Used as raw materials	MJ	0	0	0
	Total	MJ	3,26E-02	3,74E-02	7,00E-02
"Primary energy resources - Non-Renewable"	Used as energy carrier	MJ	5,12E-01	4,64E-01	9,76E-01
	Used as raw materials	MJ	1,77E-01	0	1,77E-01
	Total	MJ	6,89E-01	4,64E-01	1,15E+00
Secondary material		kg	0	0	0
Renewable secondary fuels		MJ	0	0	0
Non-renewable seconday fuels		MJ	0	0	0
Net use of fresh water		m^3	3,42E-04	5,56E-04	8,99E-04

Indicators describing waste production

PARAMETER	UNIT	UPSTREAM	CORE	TOTAL
Hazardous waste disposed	kg	4,30E-06	6,20E-07	4,92E-06
Not-Hazardous waste disposed	kg	1,09E-02	1,11E-02	2,20E-02
Radioactive waste disposed	kg	1,45E-06	1,45E-06	2,90E-06

Indicators describing output flows

PARAMETER	UNIT	UPSTREAM	CORE	TOTAL
Components for reuse	kg	0	0	0
Materials for recycling	kg	0	2,74E-03	2,74E-03
Materials for energy recovery	kg	0	1,16E-04	1,16E-04
Exported energy, electricity	MJ	0	0	0
Exported energy, thermal	MJ	0	0	0

SD0750

SIZE (mm)	WEIGHT (g)
147x142x100	28,9

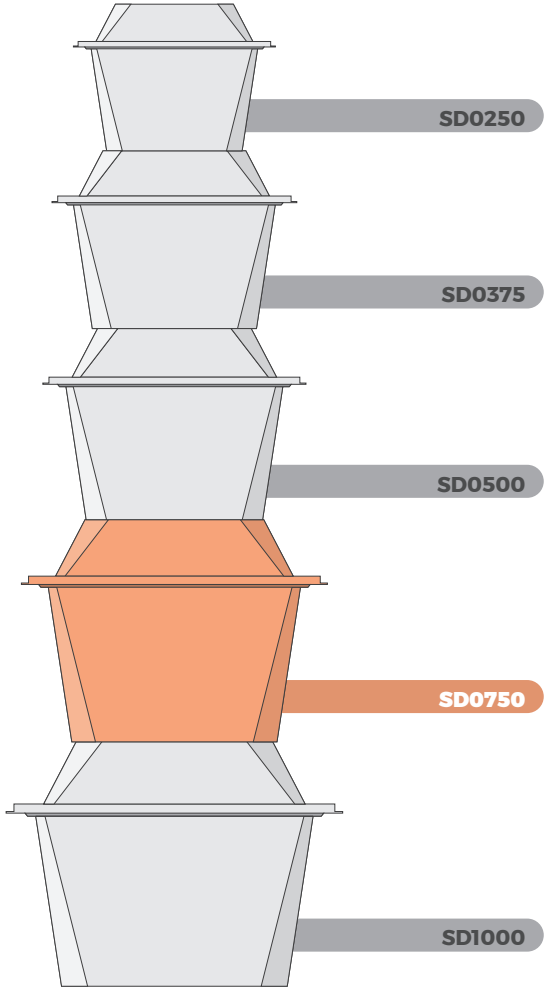

Indicators describing potential environmental impacts

PARAMETER		UNIT	UPSTREAM	CORE	TOTAL
"Global Warming Potential (GWP)"	Fossil	kg CO_2 eq	4,97E-02	4,65E-02	9,62E-02
	Biogenic	kg CO_2 eq	3,71E-03	3,48E-05	3,74E-03
	Land use and land transformation	kg CO_2 eq	4,22E-05	1,59E-05	5,81E-05
	TOTAL	kg CO_2 eq	5,35E-02	4,66E-02	1,00E-01
Acidification potential (AP)		kg SO_2 eq	1,99E-04	2,33E-04	4,31E-04
Eutrophication potential (EP)		kg PO_4^{---} eq	8,57E-05	5,70E-05	1,43E-04
Photochemical oxidant formation		kg NMVOC	1,52E-04	1,58E-04	3,10E-04
Abiotic depletion - Elements		kg Sb eq	1,82E-07	4,97E-08	2,31E-07
Abiotic depletion - Fossil Fuels		MJ	8,74E-01	6,00E-01	1,47E+00
Water scarcity potential		m^3	1,79E-02	6,84E-03	2,47E-02

Indicators describing use of primary and secondary resources

PARAMETER		UNIT	UPSTREAM	CORE	TOTAL
"Primary energy resources - Renewable"	Used as energy carrier	MJ	4,84E-02	5,61E-02	1,04E-01
	Used as raw materials	MJ	0	0	0
	Total	MJ	4,84E-02	5,61E-02	1,04E-01
"Primary energy resources - Non-Renewable"	Used as energy carrier	MJ	7,74E-01	6,89E-01	1,46E+00
	Used as raw materials	MJ	2,69E-01	0	2,69E-01
	Total	MJ	1,04E+00	6,89E-01	1,73E+00
Secondary material		kg	0	0	0
Renewable secondary fuels		MJ	0	0	0
Non-renewable seconday fuels		MJ	0	0	0
Net use of fresh water		m^3	5,46E-04	2,01E-04	7,62E-04

Indicators describing waste production

PARAMETER	UNIT	UPSTREAM	CORE	TOTAL
Hazardous waste disposed	kg	6,52E-06	9,24E-07	7,44E-06
Not-Hazardous waste disposed	kg	1,65E-02	1,66E-02	3,31E-02
Radioactive waste disposed	kg	2,19E-06	2,16E-06	4,35E-06

Indicators describing output flows

PARAMETER	UNIT	UPSTREAM	CORE	TOTAL
Components for reuse	kg	0	0	0
Materials for recycling	kg	0	4,17E-03	4,17E-03
Materials for energy recovery	kg	0	1,76E-04	1,76E-04
Exported energy, electricity	MJ	0	0	0
Exported energy, thermal	MJ	0	0	0

SD1000

SIZE (mm)	WEIGHT (g)
160x155x112	30,8

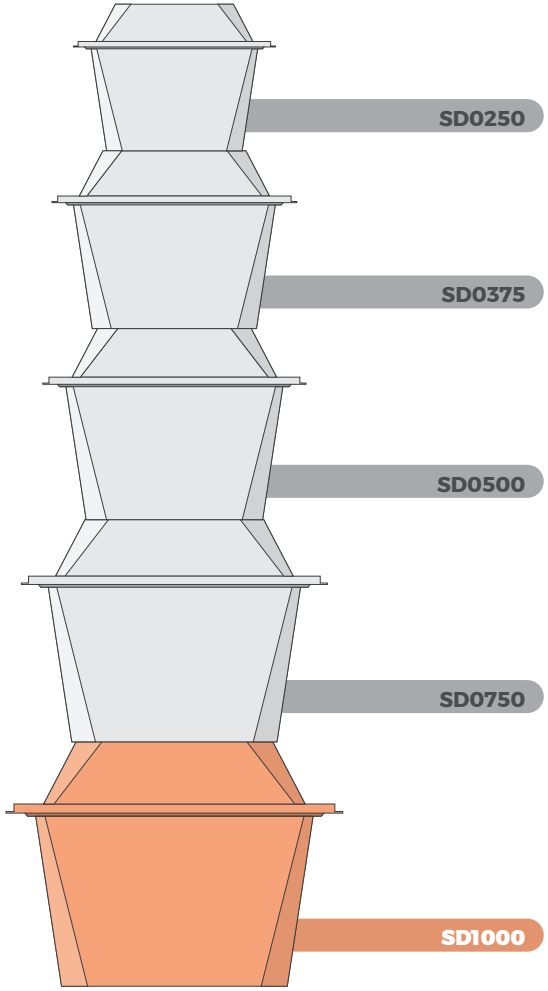

Indicators describing potential environmental impacts

PARAMETER		UNIT	UPSTREAM	CORE	TOTAL
"Global Warming Potential (GWP)"	Fossil	kg CO_2 eq	5,29E-02	4,94E-02	1,02E-01
	Biogenic	kg CO_2 eq	3,94E-03	3,70E-05	3,98E-03
	Land use and land transformation	kg CO_2 eq	4,52E-05	1,69E-05	6,21E-05
	TOTAL	kg CO_2 eq	5,69E-02	4,95E-02	1,06E-01
Acidification potential (AP)		kg SO_2 eq	2,11E-04	2,47E-04	4,59E-04
Eutrophication potential (EP)		kg PO_4^{---} eq	9,12E-05	6,06E-05	1,52E-04
Photochemical oxidant formation		kg NMVOC	1,62E-04	1,68E-04	3,29E-04
Abiotic depletion - Elements		kg Sb eq	1,93E-07	5,28E-08	2,46E-07
Abiotic depletion - Fossil Fuels		MJ	9,30E-01	6,38E-01	1,57E+00
Water scarcity potential		m^3	1,90E-02	7,27E-03	2,63E-02

Indicators describing use of primary and secondary resources

PARAMETER		UNIT	UPSTREAM	CORE	TOTAL
"Primary energy resources - Renewable"	Used as energy carrier	MJ	5,17E-02	5,96E-02	1,11E-01
	Used as raw materials	MJ	0	0	0
	Total	MJ	5,17E-02	5,96E-02	1,11E-01
"Primary energy resources - Non-Renewable"	Used as energy carrier	MJ	8,23E-01	7,33E-01	1,56E+00
	Used as raw materials	MJ	2,86E-01	0	2,86E-01
	Total	MJ	1,11E+00	7,33E-01	1,84E+00
Secondary material		kg	0	0	0
Renewable secondary fuels		MJ	0	0	0
Non-renewable seconday fuels		MJ	0	0	0
Net use of fresh water		m^3	5,51E-04	8,74E-04	1,43E-03

Indicators describing waste production

PARAMETER	UNIT	UPSTREAM	CORE	TOTAL
Hazardous waste disposed	kg	6,93E-06	9,82E-07	7,91E-06
Not-Hazardous waste disposed	kg	1,75E-02	1,77E-02	3,52E-02
Radioactive waste disposed	kg	2,33E-06	2,29E-06	4,62E-06

Indicators describing output flows

PARAMETER	UNIT	UPSTREAM	CORE	TOTAL
Components for reuse	kg	0	0	0
Materials for recycling	kg	0	4,43E-03	4,43E-03
Materials for energy recovery	kg	0	1,87E-04	1,87E-04
Exported energy, electricity	MJ	0	0	0
Exported energy, thermal	MJ	0	0	0

OTHER ENVIRONMENTAL INFORMATION

Contribution of each Life Cycle stage on Global Warming Potential

The contributional analysis is a focus on the global warming potential impact category in order to help the customer understanding where the GWP of the product derives from.

SD0250 **SD0375** **SD0500** **SD0750** **SD1000**

GWP CORE
Materials transportation
Tray production

GWP UPSTREAM
Raw materials production

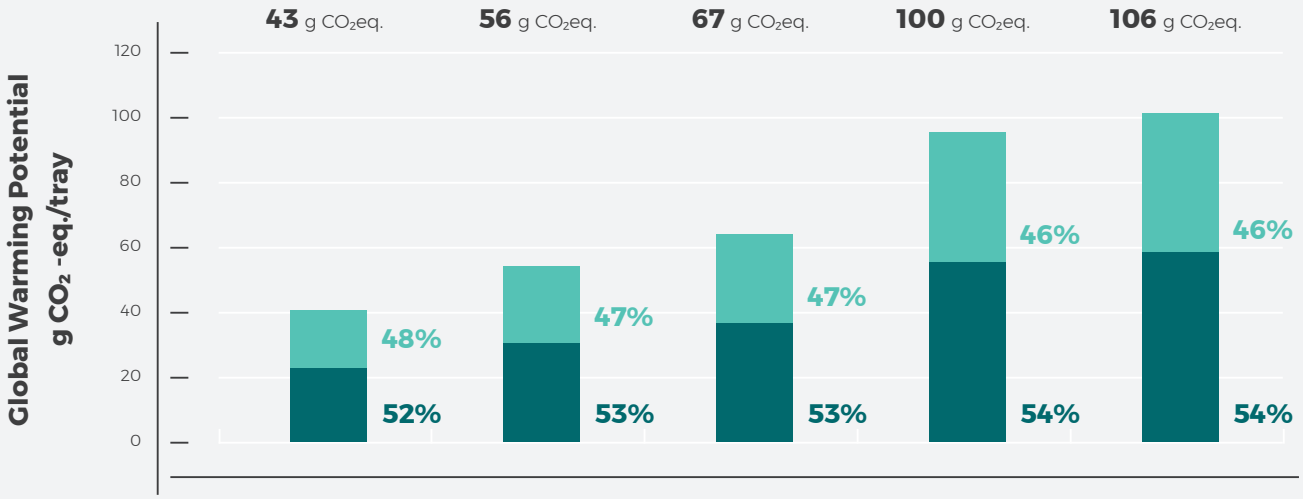

**These results are derived from the previous pages describing the environmental impact of the D.edge® packaging on the European Market.*

ADDITIONAL INFORMATION

Sirap, also through this EPD, is committed to communicating the advantages in the use of its products in **a transparent way**, addressing them to all the stakeholders.
In fact, in addition to informing direct customers (retail, industry and distribution) and making its know-how available, Sirap embosses on each new product the indication of the **recycled content** and an invitation **to recycle the packaging**, separating it correctly in the fraction of plastic. This way, even the final consumer, who will use the product, will be further **informed** and **guided** towards the **correct management** of the waste.
By properly recycling the container, its environmental impact is considerably reduced.

Correct disposal of waste contributes positively to the **creation of a circular economy system** that brings concrete benefits to the environment, people and markets.

Besides, we have activated **awareness initiatives** through category groups and collaborations with stakeholders in the recycling industry, including *Corepla* (Italian Plastic Recovery Consortium), to identify solutions that make finished products **100% recyclable** after use by the consumer.

https://www.sirapgroup.com/read-sustain-eng.php?page=reciclo&ida=72&area=circolari

SD0750

OTHER ENVIRONMENTAL INFORMATION

EU Potential End-Of-Life Scenarios for PET trays | **SD500**

The following analysis provides the customers a general understanding of the End-Of_life environmental impacts of a PET tray, considering the actual average scenarios of plastic packaging waste from some European countries. These results must be interpreted as a general view, because PET trays are not yet commonly recycled. *The datas are related only to the final disposal stage (C3): no upstream, no corestream and transportations are included.*

End-of-life sources:

Italy: "Corepla Sustainability Report 2019"; France, Poland, Spain, UK, Germany: "Plastics-The Facts 2018", "Plastics – the Facts 2019", PlasticsEurope.

COUNTRY	RECYCLING [%]	ENERGY RECOVERY [%]	LANDFILL [%]
ITALY	43	49	8
FRANCE	26,2	44,6	29,2
POLAND	38,5	32,9	28,6
SPAIN	45,4	16,4	38,2
UK	46	32	22
GERMANY	50	49,9	0,1

Indicators describing potential environmental impacts

PARAMETER	UNIT	ITALY	FRANCE	POLAND	SPAIN	UK	GERMANY
Global Warming Potential (GWP)	kg CO_2 eq	1,93E-02	1,80E-02	1,34E-02	7,07E-03	1,29E-02	1,95E-02
Acidification potential (AP)	kg SO_2 eq	3,62E-06	3,74E-06	2,90E-06	1,93E-06	2,71E-06	3,53E-06
Eutrophication potential (EP)	kg PO_4^{---} eq	8,76E-06	2,61E-05	2,51E-05	3,23E-05	1,96E-05	2,26E-06
Photochemical oxidant formation	kg NMVOC	4,85E-06	4,91E-06	3,79E-06	2,43E-06	3,55E-06	4,75E-06
Abiotic depletion - Elements	kg Sb eq	3,06E-10	3,39E-10	2,70E-10	2,01E-10	2,46E-10	2,89E-10
Abiotic depletion - Fossil Fuels	MJ	2,31E-03	3,16E-03	2,67E-03	2,48E-03	2,32E-03	1,97E-03
Water scarcity potential	m^3	2,00E-04	2,31E-04	1,86E-04	1,46E-04	1,68E-04	1,86E-04

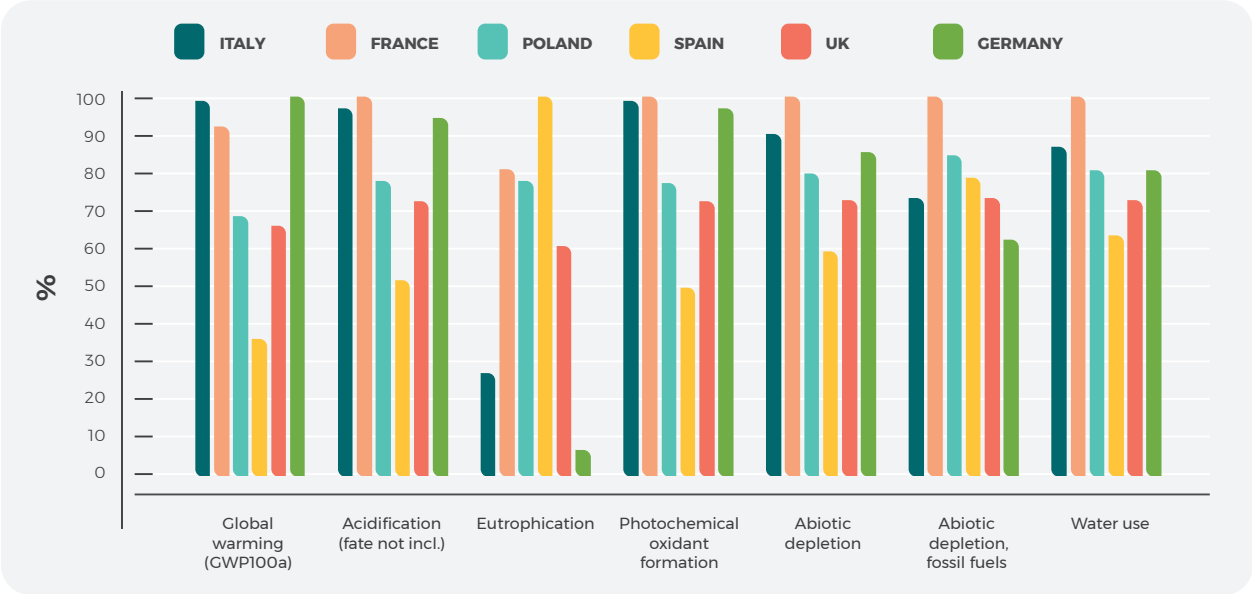

GLOSSARY

Abiotic Depletion: Depletion of abiotic resources, defined as natural sources (including energy sources), such as iron ore and crude oil, which are regarded as "non living"

Acidification potential (kg SO_2 - eq): Consequence of acids being emitted to the atmosphere and subsequently deposited in surface soils and waters

CO_2: Carbon dioxide

CPC: Central product classification

EOL: End of life

EOW: End of waste

EPD: Environmental product declaration

Eq: Equivalent

Eutrophication potential (kg PO_4^{---} - eq): Eutrophication is referred to the pollution state of aquatic ecosystems in which the over-fertilization of water and soil has turned into an increased growth of biomass

Global Warming Potential (kg CO_2 - eq): the GWP is determined by the greenhouse gas emissions resulting from the production, use and end of life of a product

ISO: International Organization for Standardization

kg: kilogram

LCA: Life Cycle Assessment

m^3: cubic meters

MJ: Mega Joule

NMVOC: Non-methane volatile organic compounds

PCR: Product Category Rules

PET: Polyethylene terephthalate

Photochemical oxidant formation (kg NMVOC): The photochemical oxidants are secondary air pollutants formed by the action of sunlight on nitrogen oxides and reactive hydrocarbons, their precursors

Post-consumer material: Material generated by households or by commercial, industrial and institutional facilities in their role as end-users of the goods or service which can no longer be used for its intended purpose (ISO 14021:2016)

Pre-consumer material: Material removed from the waste stream during a manufacturing process (ISO 14021:2016)

PO_4^{---}: Phosphate

Sb: Antimony

SO_2: Sulphur dioxide

UN: United Nations

REFERENCES

EPD International - General Programme Instructions for the Internatonal EPD® System. Version 3.01, dated 2019-09-18. www.environdec.com

Product Category Rules (PCR) 2019:13. Packaging. Product Category Classification: CPC 36490. Version 1.0, dated 2019-11-08. www.environdec.com

European Residual Mixes - Results of the calculation of Residual Mixes for the calendar year 2017
Source: https://www.aib-net.org/facts/european-residual-mix (pg.7)

Certification body regulation (currently "Regulation for the verification of the Environmental Product Declaration and process EPD" by SGS Rev. 6 December 2018)

Packaging Product Category Classification: multiple CPC PCR 2019:13

ISO 14040:2006 - ISO 14044:2006 - ISO 14025:2006 - ISO 14001:2015

EPD "Imballaggi in plastica per alimenti freschi" - S-P-02029 - PRO FOOD https://profooditalia.it/

"Corepla Sustainability Report 2019"
https://www.corepla.it/bilancio-programmazione-e-rapporto-di-sostenibilit

"Plastics – the Facts 2019", PlasticsEurope
https://www.plasticseurope.org/it/resources/publications

"Plastics – the Facts 2018", PlasticsEurope
https://www.plasticseurope.org/it/resources/publications

Download *"Sirap - sustainability report 2019"* to get full details of our sustainability committment on **www.sirapgroup.com/sustainability**

PROGRAMME INFORMATION

Product Category Rules (PCR):

Product Category Rules (PCR) 2019:13. Packaging. Product Category Classification: CPC 36490. Version 1.0, dated 2019-11-08. www.environdec.com

Geographic scope:

Europe

The PCR review was conducted by:

Maurizio Fieschi - The Technical Committee of the International EPD® System.

Contact via info@environdec.com

Indipendent third-party verification of the declaration and data, according to ISO 14025:2006:

☐ EPD Process Certification ☑ EPD Verification

Third-party verifier:

SGS Italia S.p.A.

Via Caldera, 21 20153 - MILANO (MI) – Italy

Accredited by: ACCREDIA - ACCREDITAMENTO: 006H

Procedure for follow-up of data during EPD validity involves third party verifier:

☑ Yes ☐ No

The EPD owner has the sole ownership, liability and responsibility of the EPD.
EPDs within the same product category but from different programmes may not be comparable.
The environmental impacts of different EPDs can be compared only taking into account all the technical information supporting the declared/functional unit definition as requested by the PCR.
The EPD was verified remotely without an on-site visit, the on-site verification will be performed within 6 month from the date of approval.

Programme operator:

EPD®
THE INTERNATIONAL EPD® SYSTEM

The International EPD® System

EPD International AB, Box 210 60, SE-100 31 Stockholm, Sweden.

www.environdec.com

Contact: info@environdec.com

CONTACT INFORMATION

EPD owner:

Sirap Gema SPA
via Industriale 1/3, 25028 Verolanuova (BS), Italy
www.sirapgroup.com
Contact: Stefano Villella, Sustainability manager: stefano.villella@sirapgroup.com

Programme operator:

The International EPD® System
EPD International AB, Box 210 60, SE-100 31 Stockholm, Sweden.
www.environdec.com
Contact: info@environdec.com